# Product datasheet

Specifications

Green Premium™

## Variable speed drive, ATV71, 11kW, 15HP, 380 to 480V, 57.4dB, EMC filter, without graphic terminal, CANopen, Modbus

ATV71HD11N4Z

Discontinued - Service only

Discontinued on: Nov 22, 2022 AD

End-of-service on: Nov 22, 2022 AD

## Main

| | |
|---|---|
| **Range Of Product** | Altivar 71 |
| **Product Or Component Type** | Variable speed drive |
| **Product Specific Application** | Complex, high-power machines |
| **Component Name** | ATV71 |
| **Motor Power Kw** | 11 kW, 3 phases at 380...480 V |
| **Motor Power Hp** | 15 hp, 3 phases at 380...480 V |
| **Maximum Motor Cable Length** | 50 m shielded cable<br>100 m unshielded cable |
| **Power Supply Voltage** | 380...480 V - 15...10 % |
| **Network Number Of Phases** | 3 phases |
| **Line Current** | 30 A for 480 V 3 phases 11 kW / 15 hp<br>36.6 A for 380 V 3 phases 11 kW / 15 hp |
| **Emc Filter** | Integrated |
| **Assembly Style** | With heat sink |
| **Variant** | Without remote graphic terminal |
| **Apparent Power** | 24.1 kVA at 380 V 3 phases 11 kW / 15 hp |
| **Prospective Line Isc** | 22 kA for 3 phases |
| **Nominal Output Current** | 21 A at 4 kHz 460 V 3 phases 11 kW / 15 hp<br>27.7 A at 4 kHz 380 V 3 phases 11 kW / 15 hp |
| **Maximum Transient Current** | 41.6 A for 60 s 3 phases 11 kW / 15 hp<br>45.7 A for 2 s 3 phases 11 kW / 15 hp |
| **Output Frequency** | 0.1…599 Hz |
| **Nominal Switching Frequency** | 4 kHz |
| **Switching Frequency** | 1...16 kHz adjustable<br>4...16 kHz with derating factor |
| **Asynchronous Motor Control Profile** | ENA (Energy adaptation) system for unbalanced loads<br>Sensorless flux vector control (SFVC) (voltage or current vector)<br>Voltage/frequency ratio (2 or 5 points)<br>Flux vector control (FVC) with sensor (current vector) |
| **Type Of Polarization** | No impedance for Modbus |

## Complementary

Disclaimer: This documentation is not intended as a substitute for and is not to be used for determining suitability or reliability of these products for specific user applications

| | |
|---|---|
| **Product Destination** | Asynchronous motors<br>Synchronous motors |
| **Power Supply Voltage Limits** | 323…528 V |
| **Power Supply Frequency** | 50...60 Hz - 5...5 % |
| **Power Supply Frequency Limits** | 47.5...63 Hz |
| **Speed Range** | 1…100 for asynchronous motor in open-loop mode, without speed feedback<br>1…1000 for asynchronous motor in closed-loop mode with encoder feedback<br>1…50 for synchronous motor in open-loop mode, without speed feedback |
| **Speed Accuracy** | +/- 0.01 % of nominal speed in closed-loop mode with encoder feedback 0.2 Tn to Tn<br>+/- 10 % of nominal slip without speed feedback 0.2 Tn to Tn |
| **Torque Accuracy** | +/- 15 % in open-loop mode, without speed feedback<br>+/- 5 % in closed-loop mode with encoder feedback |
| **Transient Overtorque** | 170 % of nominal motor torque +/- 10 % for 60 s every 10 minutes<br>220 % of nominal motor torque +/- 10 % for 2 s |
| **Braking Torque** | <= 150 % with braking or hoist resistor<br>30 % without braking resistor |
| **Synchronous Motor Control Profile** | Vector control without speed feedback |
| **Regulation Loop** | Adjustable PI regulator |
| **Motor Slip Compensation** | Adjustable<br>Not available in voltage/frequency ratio (2 or 5 points)<br>Automatic whatever the load<br>Suppressable |
| **Diagnostic** | 1 LED (red) for drive voltage |
| **Output Voltage** | <= power supply voltage |
| **Insulation** | Electrical between power and control |
| **Type Of Cable For Mounting In An Enclosure** | With a NEMA Type1 kit: 3 wire(s)UL 508 cable at 40 °C, copper 75 °C / PVC<br>With an IP21 or an IP31 kit: 3 wire(s)IEC cable at 40 °C, copper 70 °C / PVC<br>Without mounting kit: 1 wire(s)IEC cable at 45 °C, copper 70 °C / PVC<br>Without mounting kit: 1 wire(s)IEC cable at 45 °C, copper 90 °C / XLPE/EPR |
| **Electrical Connection** | Terminal, clamping capacity: 2.5 mm², AWG 14 (AI1-/AI1+, AI2, AO1, R1A, R1B, R1C, R2A, R2B, LI1...LI6, PWR)<br>Terminal, clamping capacity: 16 mm², AWG 4 (L1/R, L2/S, L3/T, U/T1, V/T2, W/T3, PC/-, PO, PA/+, PA, PB) |
| **Tightening Torque** | 0.6 N.m (AI1-/AI1+, AI2, AO1, R1A, R1B, R1C, R2A, R2B, LI1...LI6, PWR)<br>3 N.m, 26.5 lb.in (L1/R, L2/S, L3/T, U/T1, V/T2, W/T3, PC/-, PO, PA/+, PA, PB) |
| **Supply** | Internal supply for reference potentiometer (1 to 10 kOhm): 10.5 V DC +/- 5 %, <10 mA, protection type: overload and short-circuit protection<br>Internal supply: 24 V DC (21…27 V), <200 mA, protection type: overload and short-circuit protection |
| **Analogue Input Number** | 2 |
| **Analogue Input Type** | AI1-/AI1+ bipolar differential voltage: +/- 10 V DC 24 V max, resolution 11 bits + sign<br>AI2 software-configurable current: 0...20 mA, impedance: 242 Ohm, resolution 11 bits<br>AI2 software-configurable voltage: 0...10 V DC 24 V max, impedance: 30000 Ohm, resolution 11 bits |
| **Input Sampling Time** | 2 ms +/- 0.5 ms (AI1-/AI1+) - analog input(s)<br>2 ms +/- 0.5 ms (AI2) - analog input(s)<br>2 ms +/- 0.5 ms (LI1...LI5) - discrete input(s)<br>2 ms +/- 0.5 ms (LI6)if configured as logic input - discrete input(s) |
| **Response Time** | <= 100 ms in STO (Safe Torque Off)<br>AO1 2 ms, tolerance +/- 0.5 ms for analog output(s)<br>R1A, R1B, R1C 7 ms, tolerance +/- 0.5 ms for discrete output(s)<br>R2A, R2B 7 ms, tolerance +/- 0.5 ms for discrete output(s) |
| **Absolute Accuracy Precision** | +/- 0.6 % (AI1-/AI1+) for a temperature variation 60 °C<br>+/- 0.6 % (AI2) for a temperature variation 60 °C<br>+/- 1 % (AO1) for a temperature variation 60 °C |

| | |
|---|---|
| **Linearity Error** | +/- 0.15 % of maximum value (AI1-/AI1+, AI2)<br>+/- 0.2 % (AO1) |
| **Analogue Output Number** | 1 |
| **Analogue Output Type** | AO1 software-configurable logic output 10 V 20 mA<br>AO1 software-configurable current 0...20 mA, impedance: 500 Ohm, resolution 10 bits<br>AO1 software-configurable voltage 0...10 V DC, impedance: 470 Ohm, resolution 10 bits |
| **Discrete Output Number** | 2 |
| **Discrete Output Type** | Configurable relay logic: (R1A, R1B, R1C) NO/NC - 100000 cycles<br>Configurable relay logic: (R2A, R2B) NO - 100000 cycles |
| **Minimum Switching Current** | 3 mA at 24 V DC for configurable relay logic |
| **Maximum Switching Current** | R1, R2: 2 A at 250 V AC inductive load, cos phi = 0.4<br>R1, R2: 2 A at 30 V DC inductive load, cos phi = 0.4<br>R1, R2: 5 A at 250 V AC resistive load, cos phi = 1<br>R1, R2: 5 A at 30 V DC resistive load, cos phi = 1 |
| **Discrete Input Number** | 7 |
| **Discrete Input Type** | LI1...LI5: programmable 24 V DC with level 1 PLC, impedance: 3500 Ohm<br>LI6: switch-configurable 24 V DC with level 1 PLC, impedance: 3500 Ohm<br>LI6: switch-configurable PTC probe 0…6, impedance: 1500 Ohm<br>PWR: safety input 24 V DC, impedance: 1500 Ohm conforming to ISO 13849-1 level d |
| **Discrete Input Logic** | Negative logic (sink) (LI1...LI5), > 16 V (state 0), < 10 V (state 1)<br>Positive logic (source) (LI1...LI5), < 5 V (state 0), > 11 V (state 1)<br>Negative logic (sink) (LI6)if configured as logic input, > 16 V (state 0), < 10 V (state 1)<br>Positive logic (source) (LI6)if configured as logic input, < 5 V (state 0), > 11 V (state 1) |
| **Acceleration And Deceleration Ramps** | Automatic adaptation of ramp if braking capacity exceeded, by using resistor<br>Linear adjustable separately from 0.01 to 9000 s<br>S, U or customized |
| **Braking To Standstill** | By DC injection |
| **Protection Type** | Against exceeding limit speed: drive<br>Against input phase loss: drive<br>Break on the control circuit: drive<br>Input phase breaks: drive<br>Line supply overvoltage: drive<br>Line supply undervoltage: drive<br>Overcurrent between output phases and earth: drive<br>Overheating protection: drive<br>Overvoltages on the DC bus: drive<br>Short-circuit between motor phases: drive<br>Thermal protection: drive<br>Motor phase break: motor<br>Power removal: motor<br>Thermal protection: motor |
| **Insulation Resistance** | > 1 mOhm 500 V DC for 1 minute to earth |
| **Frequency Resolution** | Analog input: 0.024/50 Hz<br>Display unit: 0.1 Hz |
| **Communication Port Protocol** | CANopen<br>Modbus |
| **Connector Type** | 1 RJ45 (on front face) for Modbus<br>1 RJ45 (on terminal) for Modbus<br>Male SUB-D 9 on RJ45 for CANopen |
| **Physical Interface** | 2-wire RS 485 for Modbus |
| **Transmission Frame** | RTU for Modbus |
| **Transmission Rate** | 4800 bps, 9600 bps, 19200 bps, 38.4 Kbps for Modbus on terminal<br>9600 bps, 19200 bps for Modbus on front face<br>20 kbps, 50 kbps, 125 kbps, 250 kbps, 500 kbps, 1 Mbps for CANopen |
| **Data Format** | 8 bits, 1 stop, even parity for Modbus on front face<br>8 bits, odd even or no configurable parity for Modbus on terminal |

| | |
|---|---|
| **Number Of Addresses** | 1…127 for CANopen<br>1…247 for Modbus |
| **Method Of Access** | Slave CANopen |
| **Marking** | CE |
| **Operating Position** | Vertical +/- 10 degree |
| **Height** | 295 mm |
| **Depth** | 213 mm |
| **Width** | 210 mm |
| **Net Weight** | 8 kg |
| **Option Card** | Communication card for CC-Link<br>Controller inside programmable card<br>Communication card for DeviceNet<br>Communication card for EtherNet/IP<br>Communication card for Fipio<br>I/O extension card<br>Communication card for Interbus-S<br>Interface card for encoder<br>Communication card for Modbus Plus<br>Communication card for Modbus TCP<br>Communication card for Modbus/Uni-Telway<br>Overhead crane card<br>Communication card for Profibus DP<br>Communication card for Profibus DP V1 |

# Environment

| | |
|---|---|
| **Noise Level** | 57.4 dB conforming to 86/188/EEC |
| **Dielectric Strength** | 3535 V DC between earth and power terminals<br>5092 V DC between control and power terminals |
| **Electromagnetic Compatibility** | 1.2/50 µs - 8/20 µs surge immunity test level 3 conforming to IEC 61000-4-5<br>Conducted radio-frequency immunity test level 3 conforming to IEC 61000-4-6<br>Electrical fast transient/burst immunity test level 4 conforming to IEC 61000-4-4<br>Electrostatic discharge immunity test level 3 conforming to IEC 61000-4-2<br>Radiated radio-frequency electromagnetic field immunity test level 3 conforming to IEC 61000-4-3<br>Voltage dips and interruptions immunity test conforming to IEC 61000-4-11 |
| **Standards** | IEC 61800-3 environments 2 category C3<br>EN 55011 class A group 2<br>IEC 60721-3-3 class 3S2<br>IEC 61800-5-1<br>IEC 61800-3 environments 1 category C3<br>UL Type 1<br>IEC 61800-3<br>IEC 60721-3-3 class 3C1 |
| **Product Certifications** | UL<br>C-Tick<br>GOST<br>CSA<br>NOM 117 |
| **Pollution Degree** | 2 conforming to IEC 61800-5-1 |
| **Ip Degree Of Protection** | IP20 on upper part without blanking plate on cover conforming to IEC 60529<br>IP20 on upper part without blanking plate on cover conforming to IEC 61800-5-1<br>IP21 conforming to IEC 60529<br>IP21 conforming to IEC 61800-5-1<br>IP41 on upper part conforming to IEC 60529<br>IP41 on upper part conforming to IEC 61800-5-1<br>IP54 on lower part conforming to IEC 60529<br>IP54 on lower part conforming to IEC 61800-5-1 |
| **Vibration Resistance** | 1 gn (f= 13…200 Hz) conforming to IEC 60068-2-6<br>1.5 mm peak to peak (f= 3…13 Hz) conforming to IEC 60068-2-6 |
| **Shock Resistance** | 15 gn for 11 ms conforming to IEC 60068-2-27 |

| | |
|---|---|
| **Relative Humidity** | 5…95 % without condensation conforming to IEC 60068-2-3<br>5…95 % without dripping water conforming to IEC 60068-2-3 |
| **Ambient Air Temperature For Operation** | -10…50 °C (without derating) |
| **Ambient Air Temperature For Storage** | -25…70 °C |
| **Operating Altitude** | <= 1000 m without derating<br>1000...3000 m with current derating 1 % per 100 m |

## Packing Units

| | |
|---|---|
| **Unit Type Of Package 1** | PCE |
| **Number Of Units In Package 1** | 1 |
| **Package 1 Height** | 35.0 cm |
| **Package 1 Width** | 34.0 cm |
| **Package 1 Length** | 45.5 cm |
| **Package 1 Weight** | 10.965 kg |
| **Unit Type Of Package 2** | S06 |
| **Number Of Units In Package 2** | 1 |
| **Package 2 Height** | 73.5 cm |
| **Package 2 Width** | 60.0 cm |
| **Package 2 Length** | 80.0 cm |
| **Package 2 Weight** | 23.965 kg |
| **Unit Type Of Package 3** | P06 |
| **Number Of Units In Package 3** | 2 |
| **Package 3 Height** | 77.0 cm |
| **Package 3 Width** | 80.0 cm |
| **Package 3 Length** | 60.0 cm |
| **Package 3 Weight** | 30.43 kg |

## Contractual warranty

| | |
|---|---|
| **Warranty** | 18 months |

## Sustainability

**Green Premium™ label** is Schneider Electric's commitment to delivering products with best-in-class environmental performance. Green Premium promises compliance with the latest regulations, transparency on environmental impacts, as well as circular and low-$CO_2$ products.

**Guide to assessing product sustainability** is a white paper that clarifies global eco-label standards and how to interpret environmental declarations.

Learn more about Green Premium >

Guide to assess a product's sustainability >

RoHS/REACh

## Well-being performance

Mercury Free

| | |
|---|---|
| Rohs Exemption Information | Yes |

## Certifications & Standards

| | |
|---|---|
| **Eu Rohs Directive** | Pro-active compliance (Product out of EU RoHS legal scope)<br>EU RoHS Declaration |
| **China Rohs Regulation** | China RoHS declaration |
| **Weee** | The product must be disposed on European Union markets following specific waste collection and never end up in rubbish bins |
| **Circularity Profile** | End of Life Information |

## Dimensions Drawings

### Variable Speed Drives without Graphic Display Terminal

#### Dimensions without Option Card

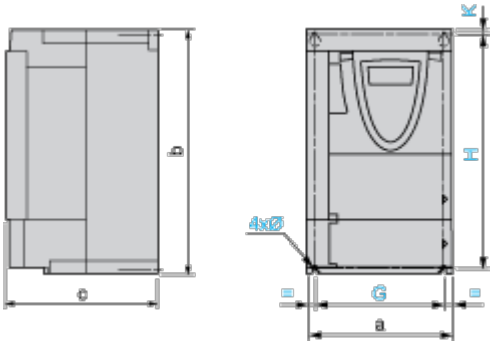


Dimensions in mm

| a | b | c | G | H | K | Ø |
|---|---|---|---|---|---|---|
| 210 | 295 | 187 | 190 | 283 | 6 | 6 |

Dimensions in in.

| a | b | c | G | H | K | Ø |
|---|---|---|---|---|---|---|
| 8.26 | 11.61 | 7.36 | 7.48 | 11.14 | 0.23 | 0.23 |

#### Dimensions with 1 Option Card (1)

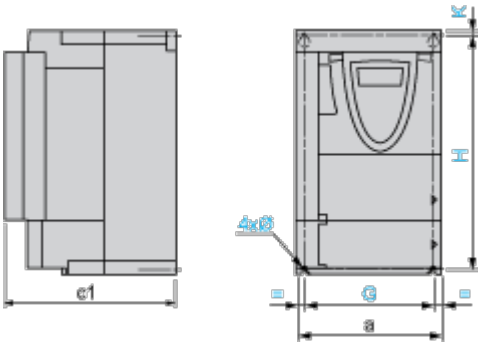


Dimensions in mm

| a | c1 | G | H | K | Ø |
|---|---|---|---|---|---|
| 210 | 210 | 190 | 283 | 6 | 6 |

Dimensions in in.

| a | c1 | G | H | K | Ø |
|---|---|---|---|---|---|
| 8.26 | 8.26 | 7.48 | 11.14 | 0.23 | 0.23 |

(1) Option cards: I/O extension cards, communication cards or "Controller Inside" programmable card.

#### Dimensions with 2 Option Cards (1)

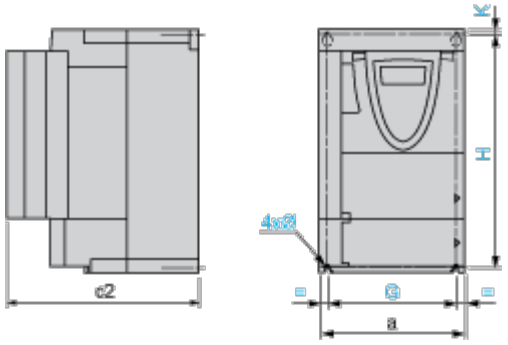


Dimensions in mm

| a | c2 | G | H | K | Ø |
|---|---|---|---|---|---|
| 210 | 233 | 190 | 283 | 6 | 6 |

Dimensions in in.

| a | c2 | G | H | K | Ø |
|---|---|---|---|---|---|
| 8.26 | 9.17 | 7.48 | 11.14 | 0.23 | 0.23 |

(1) Option cards: I/O extension cards, communication cards or "Controller Inside" programmable card.

# Mounting and Clearance

## Mounting Recommendations

Depending on the conditions in which the drive is to be used, its installation will require certain precautions and the use of appropriate accessories.
Install the unit vertically:

- Avoid placing it close to heating elements
- Leave sufficient free space to ensure that the air required for cooling purposes can circulate from the bottom to the top of the unit.

## Clearance

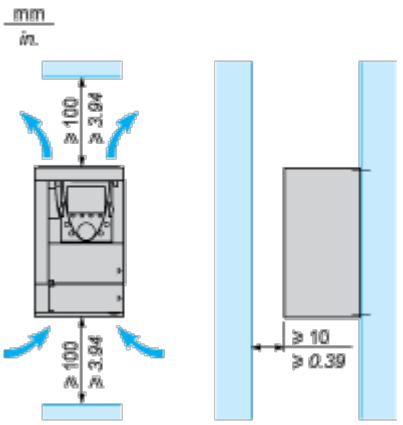


## Mounting Types

### Type A Mounting

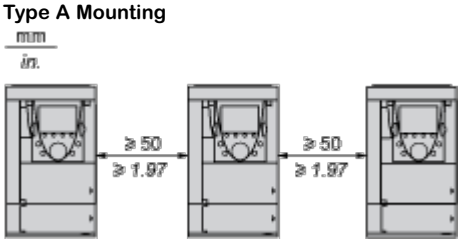


### Type B Mounting

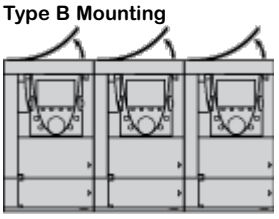

### Type C Mounting

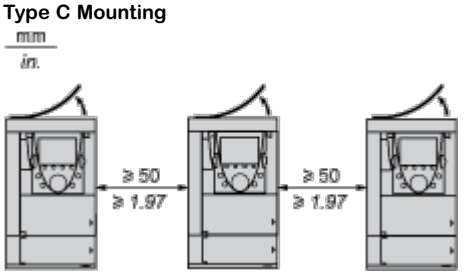


By removing the protective blanking cover from the top of the drive, the degree of protection for the drive becomes IP 20.
The protective blanking cover may vary according to the drive model (refer to the user guide).

The protective blanking cover must be removed from ATV 71P•••N4Z drives when they are mounted in a dust and damp proof enclosure.

## Specific Recommendations for Mounting the Drive in an Enclosure

### Ventilation

To ensure proper air circulation in the drive:

- Fit ventilation grilles.
- Ensure that there is sufficient ventilation. If there is not, install a forced ventilation unit with a filter. The openings and/or fans must provide a flow rate at least equal to that of the drive fans (refer to the product characteristics).

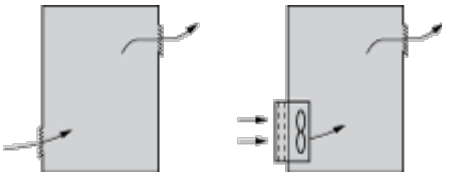

- Use special filters with IP 54 protection.
- Remove the blanking cover from the top of the drive.

### Dust and Damp Proof Metal Enclosure (IP 54)

The drive must be mounted in a dust and damp proof enclosure in certain environmental conditions: dust, corrosive gases, high humidity with risk of condensation and dripping water, splashing liquid, etc.
This enables the drive to be used in an enclosure where the maximum internal temperature reaches 50°C.

## Connections and Schema

### Wiring Diagram Conforming to Standards EN 954-1 Category 1, IEC/EN 61508 Capacity SIL1, in Stopping Category 0 According to IEC/EN 60204-1

### Three-Phase Power Supply with Upstream Breaking via Contactor

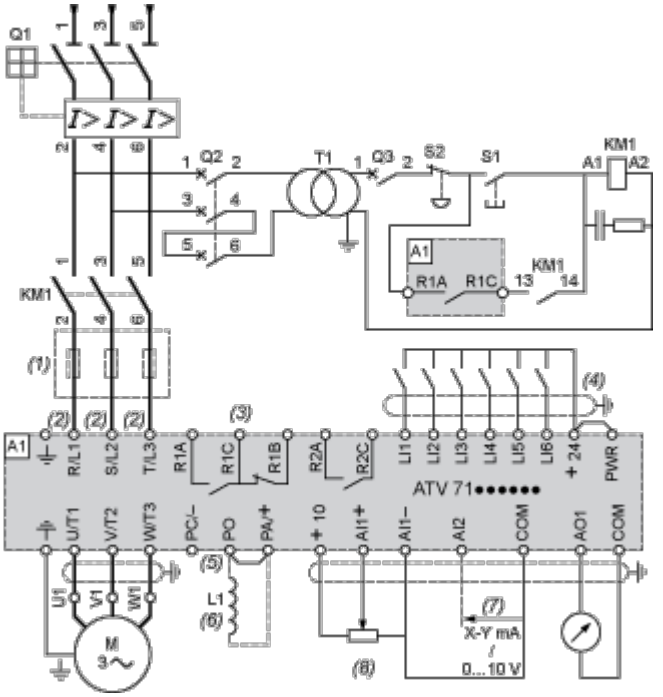


A1 ATV71 drive

KM1 Contactor

L1 DC choke

Q1 Circuit-breaker

Q2 GV2 L rated at twice the nominal primary current of T1

Q3 GB2CB05

S1, S2 XB4 B or XB5 A pushbuttons

T1 100 VA transformer 220 V secondary

(1) Line choke (three-phase); mandatory for ATV71HC11Y…HC63Y drives (except when a special transformer is used (12-pulse)).

(2) For ATV71HC40N4 drives combined with a 400 kW motor, ATV71HC50N4 and ATV71HC40Y…HC63Y, refer to the power terminal connections diagram.

(3) Fault relay contacts. Used for remote signalling of the drive status.

(4) Connection of the common for the logic inputs depends on the positioning of the SW1 switch. The above diagram shows the internal power supply switched to the “source” position (for other connection types, refer to the user guide).

(5) There is no PO terminal on ATV71HC11Y…HC63Y drives.

(6) Optional DC choke for ATV71H•••M3, ATV71HD11M3X…HD45M3X, ATV71•075N4…•D75N4 and ATV71P•••N4Z drives. Connected in place of the strap between the PO and PA/+ terminals. For ATV71HD55M3X, HD75M3X, ATV71HD90N4…HC50N4 drives, the choke is supplied with the drive; the customer is responsible for connecting it.

(7) Software-configurable current (0…20 mA) or voltage (0…10 V) analog input.

(8) Reference potentiometer.

All terminals are located at the bottom of the drive. Fit interference suppressors on all inductive circuits near the drive or connected on the same circuit, such as relays, contactors, solenoid valves, fluorescent lighting, etc.

## Wiring Diagram Conforming to Standards EN 954-1 Category 1, IEC/EN 61508 Capacity SIL1, in Stopping Category 0 According to IEC/EN 60204-1

### Three-Phase Power Supply with Downstream Breaking via Switch Disconnector

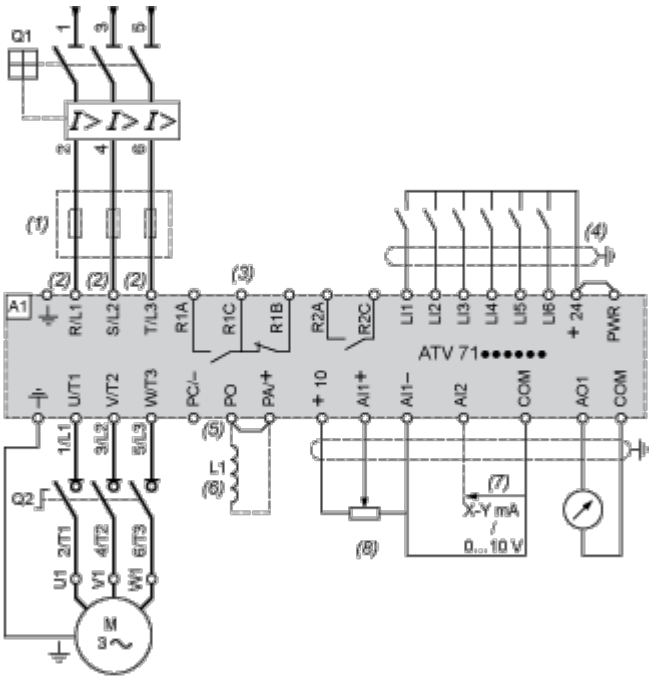


A1 ATV71 drive

L1 DC choke

Q1 Circuit-breaker

Q2 Switch disconnector (Vario)

(1) Line choke (three-phase), mandatory for ATV71HC11Y…HC63Y drives (except when a special transformer is used (12-pulse)).

(2) For ATV71HC40N4 drives combined with a 400 kW motor, ATV71HC50N4 and ATV71HC40Y…HC63Y, refer to the power terminal connections diagram.

(3) Fault relay contacts. Used for remote signalling of the drive status.

(4) Connection of the common for the logic inputs depends on the positioning of the SW1 switch. The above diagram shows the internal power supply switched to the “source” position (for other connection types, refer to the user guide).

(5) There is no PO terminal on ATV71HC11Y…HC63Y drives.

(6) Optional DC choke for ATV71H•••M3, ATV71HD11M3X…HD45M3X, ATV71•075N4…•D75N4 and ATV71P•••N4Z drives. Connected in place of the strap between the PO and PA/+ terminals. For ATV71HD55M3X, HD75M3X, ATV71HD90N4…HC50N4 drives, the choke is supplied with the drive; the customer is responsible for connecting it.

(7) Software-configurable current (0…20 mA) or voltage (0…10 V) analog input.

(8) Reference potentiometer.

All terminals are located at the bottom of the drive. Fit interference suppressors on all inductive circuits near the drive or connected on the same circuit, such as relays, contactors, solenoid valves, fluorescent lighting, etc.

## Wiring Diagram Conforming to Standards EN 954-1 Category 3, IEC/EN 61508 Capacity SIL2, in Stopping Category 0 According to IEC/EN 60204-1

### Three-Phase Power Supply, Low Inertia Machine, Vertical Movement

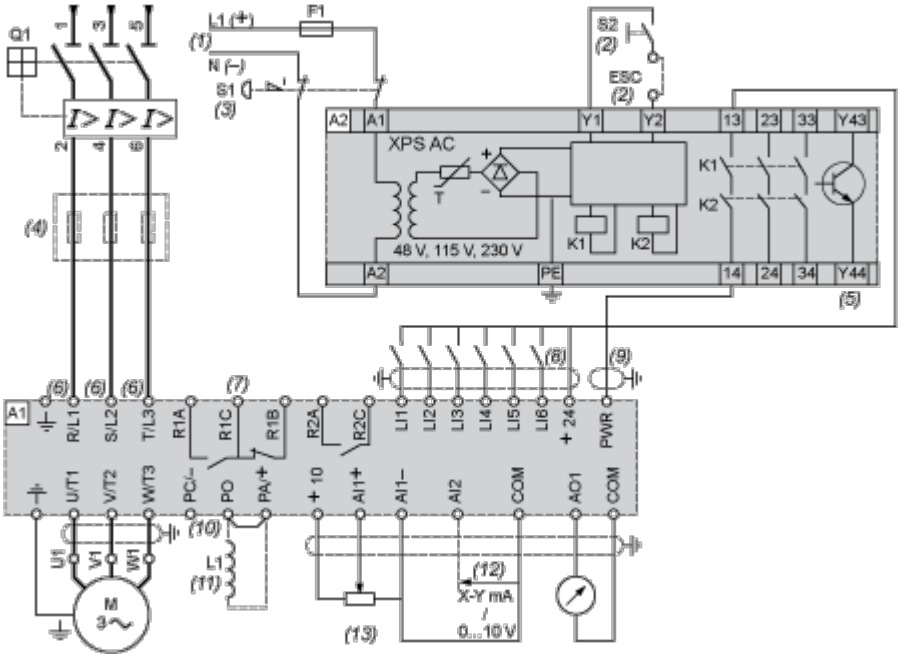


A1 ATV71 drive

A2 Preventa XPS AC safety module for monitoring emergency stops and switches. One safety module can manage the “Power Removal” function for several drives on the same machine. In this case, each drive must connect its PWR terminal to its + 24 V via the safety contacts on the XPS AC module. These contacts are independent for each drive.

F1 Fuse

L1 DC choke

Q1 Circuit-breaker

S1 Emergency stop button with 2 contacts

S2 XB4 B or XB5 A pushbutton

(1) Power supply: 24 Vdc or Vac, 48 Vac, 115 Vac, 230 Vac.

(2) S2: resets XPS AC module on power-up or after an emergency stop. ESC can be used to set external starting conditions.

(3) Requests freewheel stopping of the movement and activates the “Power Removal” safety function.

(4) Line choke (three-phase), mandatory for and ATV71HC11Y…HC63Y drives (except when a special transformer is used (12-pulse)).

(5) The logic output can be used to signal that the machine is in a safe stop state.

(6) For ATV71HC40N4 drives combined with a 400 kW motor, ATV71HC50N4 and ATV71HC40Y…HC63Y, refer to the power terminal connections diagram.

(7) Fault relay contacts. Used for remote signalling of the drive status.

(8) Connection of the common for the logic inputs depends on the positioning of the SW1 switch. The above diagram shows the internal power supply switched to the “source” position (for other connection types, refer to the user guide).

(9) Standardized coaxial cable, type RG174/U according to MIL-C17 or KX3B according to NF C 93-550, external diameter 2.54 mm /0.09 in., maximum length 15 m / 49.21 ft. The cable shielding must be earthed.

(10) There is no PO terminal on ATV71HC11Y…HC63Y drives.

(11) Optional DC choke for ATV71H•••M3, ATV71HD11M3X…HD45M3X, ATV71•075N4…•D75N4 and ATV71P•••N4Z drives. Connected in place of the strap between the PO and PA/+ terminals. For ATV71HD55M3X,

HD75M3X, ATV71HD90N4…HC50N4 drives, the choke is supplied with the drive; the customer is responsible for connecting it.

(12) Software-configurable current (0…20 mA) or voltage (0…10 V) analog input.

(13) Reference potentiometer.

All terminals are located at the bottom of the drive. Fit interference suppressors on all inductive circuits near the drive or connected on the same circuit, such as relays, contactors, solenoid valves, fluorescent lighting, etc.

## Wiring Diagram Conforming to Standards EN 954-1 Category 3, IEC/EN 61508 Capacity SIL2, in Stopping Category 1 According to IEC/EN 60204-1

### Three-Phase Power Supply, High Inertia Machine

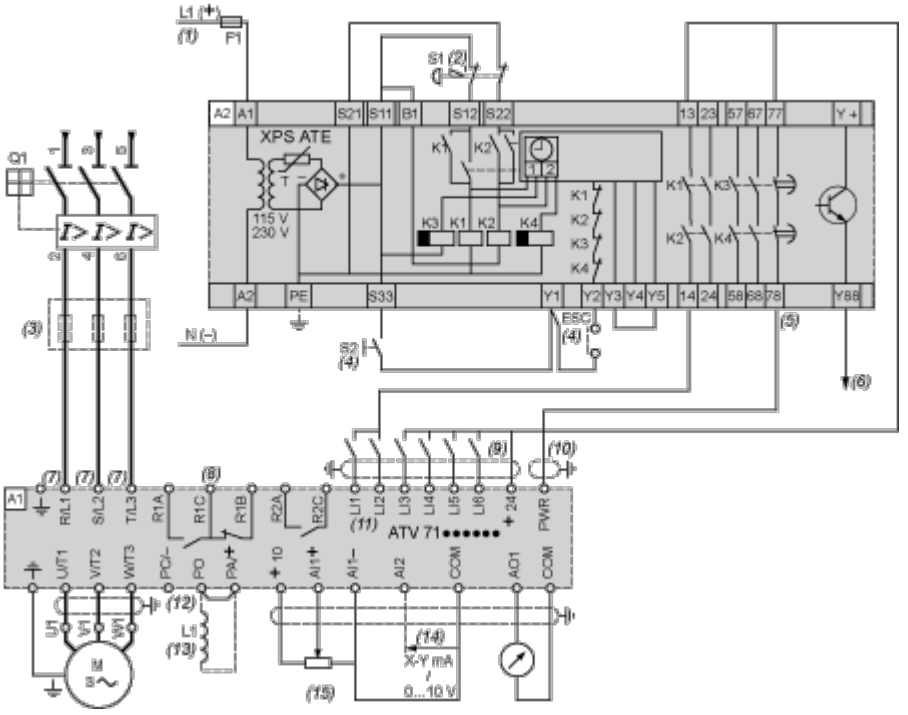


A1 ATV71 drive

A2 (5) Preventa XPS ATE safety module for monitoring emergency stops and switches. One safety module can manage the "Power Removal" safety function for several drives on the same machine. In this case the time delay must be adjusted on the drive controlling the motor that requires the longest stopping time. In addition, each drive must connect its PWR terminal to its + 24 V via the safety contacts on the XPS ATE module. These contacts are independent for each drive.

F1 Fuse

L1 DC choke

Q1 Circuit-breaker

S1 Emergency stop button with 2 N/C contacts

S2 Run button

(1) Power supply: 24 Vdc or Vac, 115 Vac, 230 Vac.

(2) Requests controlled stopping of the movement and activates the “Power Removal” safety function.

(3) Line choke (three-phase), mandatory for ATV71HC11Y…HC63Y drives (except when a special transformer is used (12-pulse)).

(4) S2: resets XPS ATE module on power-up or after an emergency stop. ESC can be used to set external starting conditions.

(5) For stopping times requiring more than 30 seconds in category 1, use a Preventa XPS AV safety module which can provide a maximum time delay of 300 seconds.

(6) The logic output can be used to signal that the machine is in a safe state.

(7) For ATV71HC40N4 drives combined with a 400 kW motor, ATV71HC50N4 and ATV71HC40Y…HC63Y, refer to the power terminal connections diagram.

(8) Fault relay contacts. Used for remote signalling of the drive status.

(9) Connection of the common for the logic inputs depends on the positioning of the SW1 switch. The above diagram shows the internal power supply switched to the “source” position (for other connection types, refer to the user guide).

(10) Standardized coaxial cable, type RG174/U according to MIL-C17 or KX3B according to NF C 93-550, external diameter 2.54 mm/0.09 in., maximum length 15 m/49.21 ft. The cable shielding must be earthed.

(11) Logic inputs LI1 and LI2 must be assigned to the direction of rotation: LI1 in the forward direction and LI2 in the reverse direction.

(12) There is no PO terminal on ATV71HC11Y…HC63Y drives.

(13) Optional DC choke for ATV71H•••M3, ATV71HD11M3X…HD45M3X, ATV71•075N4…•D75N4 and ATV71P•••N4Z drives. Connected in place of the strap between the PO and PA/+ terminals. For ATV71HD55M3X, HD75M3X, ATV71HD90N4…HC50N4 drives, the choke is supplied with the drive; the customer is responsible for connecting it.

(14) Software-configurable current (0…20 mA) or voltage (0…10 V) analog input.

(15) Reference potentiometer.

All terminals are located at the bottom of the drive. Fit interference suppressors on all inductive circuits near the drive or connected on the same circuit, such as relays, contactors, solenoid valves, fluorescent lighting, etc.

## Performance Curves

### Derating Curves

The derating curves for the drive nominal current (In) depend on the temperature, the switching frequency and the mounting type. For intermediate temperatures (e.g. 55°C), interpolate between 2 curves.

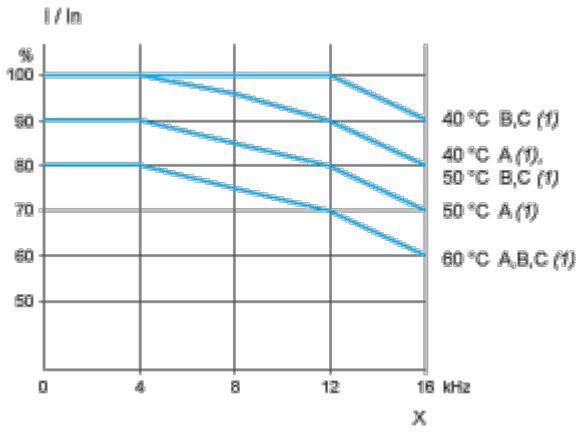


X Switching frequency

(1) Mounting type